Bangladesh Army University of Engineering & Technology
Department of Electrical & Electronic Engineering

Lecture: 06 - 08

Course Code: EEE 1261

Course Title: Electronic Devices and Circuits

Course Teacher: Ferdous Farjana

Designation: Lecturer, Dept. of EEE, BAUET

EXAMPLE 2.4 For the series diode configuration of Fig. 2.13, determine V_D, V_R, and I_D.

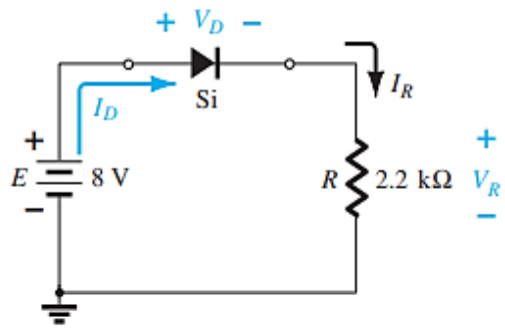

FIG. 2.13
Circuit for Example 2.4.

Solution: Since the applied voltage establishes a current in the clockwise direction to match the arrow of the symbol and the diode is in the "on" state,

$$V_D = \mathbf{0.7\ V}$$

$$V_R = E - V_D = 8\ \text{V} - 0.7\ \text{V} = \mathbf{7.3\ V}$$

$$I_D = I_R = \frac{V_R}{R} = \frac{7.3\ \text{V}}{2.2\ \text{k}\Omega} \cong \mathbf{3.32\ mA}$$

EXAMPLE 2.5 Repeat Example 2.4 with the diode reversed.

Solution: Removing the diode, we find that the direction of I is opposite to the arrow in the diode symbol and the diode equivalent is the open circuit no matter which model is employed. The result is the network of Fig. 2.14, where $I_D = \mathbf{0\ A}$ due to the open circuit. Since $V_R = I_R R$, we have $V_R = (0)R = \mathbf{0\ V}$. Applying Kirchhoff's voltage law around the closed loop yields

$$E - V_D - V_R = 0$$

and

$$V_D = E - V_R = E - 0 = E = 8\ \text{V}$$

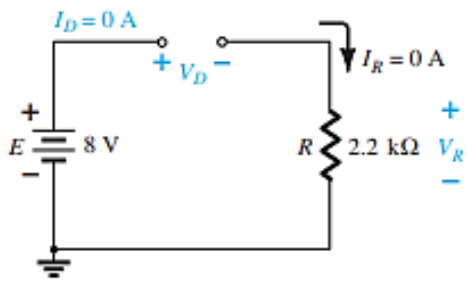

FIG. 2.14
Determining the unknown quantities for Example 2.5.

In particular, note in Example 2.5 the high voltage across the diode even though it is an "off" state. The current is zero, but the voltage is significant. For review purposes, keep the following in mind for the analysis to follow:

An open circuit can have any voltage across its terminals, but the current is always 0 A.

A short circuit has a 0-V drop across its terminals, but the current is limited only by the surrounding network.

In the next example the notation of Fig. 2.15 will be employed for the applied voltage. It is a common industry notation and one with which the reader should become very familiar. Such notation and other defined voltage levels are treated further in Chapter 4.

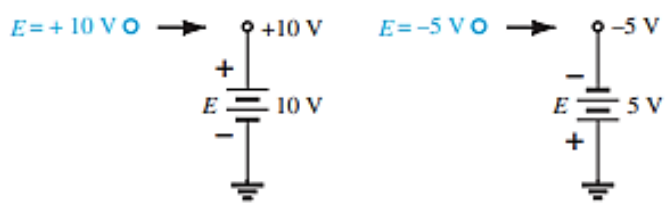

FIG. 2.15
Source notation.

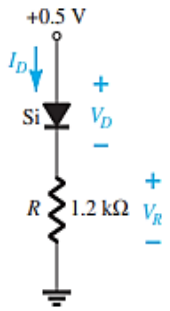

FIG. 2.16
Series diode circuit for Example 2.6.

EXAMPLE 2.6 For the series diode configuration of Fig. 2.16, determine V_D, V_R, and I_D.

Solution: Although the "pressure" establishes a current with the same direction as the arrow symbol, the level of applied voltage is insufficient to turn the silicon diode "on." The point of operation on the characteristics is shown in Fig. 2.17, establishing the open-circuit equivalent as the appropriate approximation, as shown in Fig. 2.18. The resulting voltage and current levels are therefore the following:

$$I_D = \mathbf{0\ A}$$

$$V_R = I_R R = I_D R = (0\ \text{A})\,1.2\ \text{k}\Omega = \mathbf{0\ V}$$

and

$$V_D = E = \mathbf{0.5\ V}$$

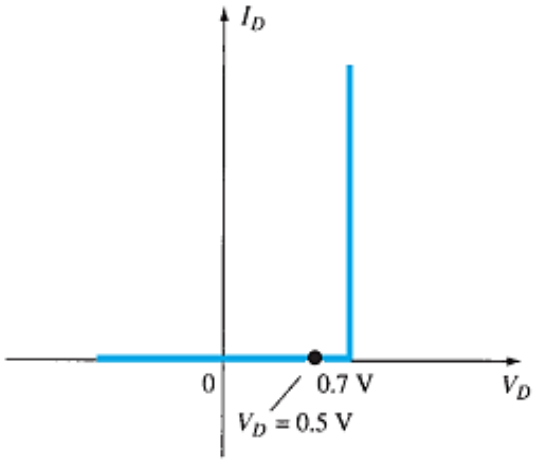

FIG. 2.17
Operating point with E = 0.5 V.

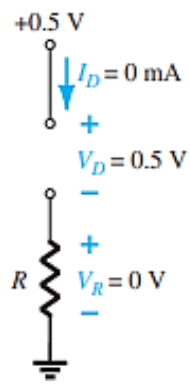

FIG. 2.18
Determining I_D, V_R, and V_D for the circuit of Fig. 2.16.

EXAMPLE 2.7 Determine V_o and I_D for the series circuit of Fig. 2.19.

Solution: An attack similar to that applied in Example 2.4 will reveal that the resulting current has the same direction as the arrowheads of the symbols of both diodes, and the network of Fig. 2.20 results because $E = 12\text{ V} > (0.7\text{ V} + 1.8\text{ V [Table 1.8]}) = 2.5\text{ V}$. Note the redrawn supply of 12 V and the polarity of V_o across the 680-Ω resistor. The resulting voltage is

$$V_o = E - V_{K_1} - V_{K_2} = 12\text{ V} - 2.5\text{ V} = \mathbf{9.5\ V}$$

and

$$I_D = I_R = \frac{V_R}{R} = \frac{V_o}{R} = \frac{9.5\text{ V}}{680\ \Omega} = \mathbf{13.97\ mA}$$

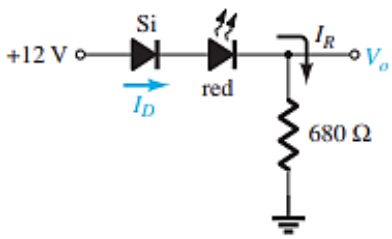

FIG. 2.19
Circuit for Example 2.7.

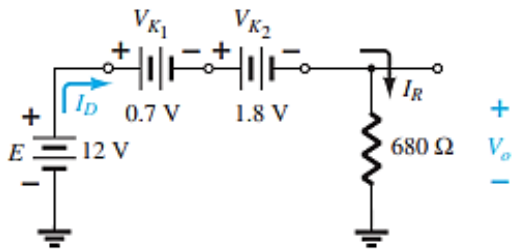

FIG. 2.20
Determining the unknown quantities for Example 2.7.

EXAMPLE 2.8 Determine I_D, V_{D_2}, and V_o for the circuit of Fig. 2.21.

Solution: Removing the diodes and determining the direction of the resulting current I result in the circuit of Fig. 2.22. There is a match in current direction for one silicon diode but not for the other silicon diode. The combination of a short circuit in series with an open circuit always results in an open circuit and $I_D = \mathbf{0\ A}$, as shown in Fig. 2.23.

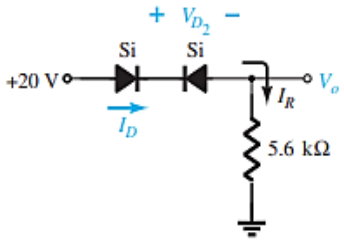

FIG. 2.21
Circuit for Example 2.8.

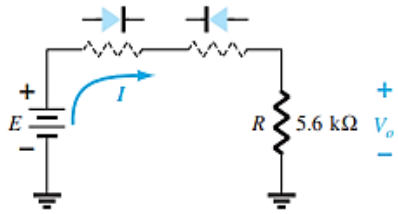

FIG. 2.22
Determining the state of the diodes of Fig. 2.21.

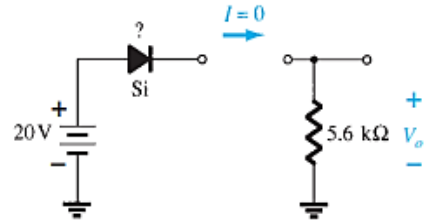

FIG. 2.23
Substituting the equivalent state for the open diode.

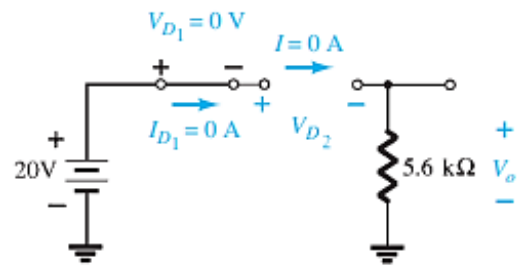

FIG. 2.24
Determining the unknown quantities for the circuit of Example 2.8.

The question remains as to what to substitute for the silicon diode. For the analysis to follow in this and succeeding chapters, simply recall for the actual practical diode that when $I_D = 0$ A, $V_D = 0$ V (and vice versa), as described for the no-bias situation in Chapter 1. The conditions described by $I_D = 0$ A and $V_{D_1} = 0$ V are indicated in Fig. 2.24. We have

$$V_o = I_R R = I_D R = (0\text{ A})R = \mathbf{0\ V}$$

and

$$V_{D_2} = V_{\text{open circuit}} = E = \mathbf{20\ V}$$

Applying Kirchhoff's voltage law in a clockwise direction gives

$$E - V_{D_1} - V_{D_2} - V_o = 0$$

and

$$V_{D_2} = E - V_{D_1} - V_o = 20\text{ V} - 0 - 0$$
$$= \mathbf{20\ V}$$

with

$$V_o = \mathbf{0\ V}$$

EXAMPLE 2.9 Determine I, V_1, V_2, and V_o for the series dc configuration of Fig. 2.25.

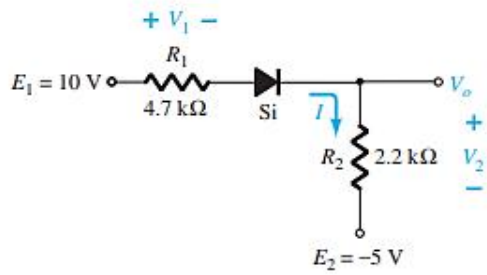

FIG. 2.25
Circuit for Example 2.9.

Solution: The sources are drawn and the current direction indicated as shown in Fig. 2.26. The diode is in the "on" state and the notation appearing in Fig. 2.27 is included to indicate this state. Note that the "on" state is noted simply by the additional $V_D = 0.7$ V on the figure. This eliminates the need to redraw the network and avoids any confusion that may

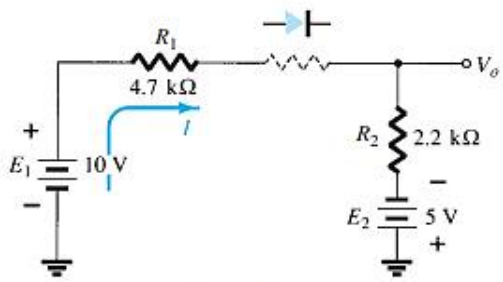

FIG. 2.26
Determining the state of the diode for the network of Fig. 2.25.

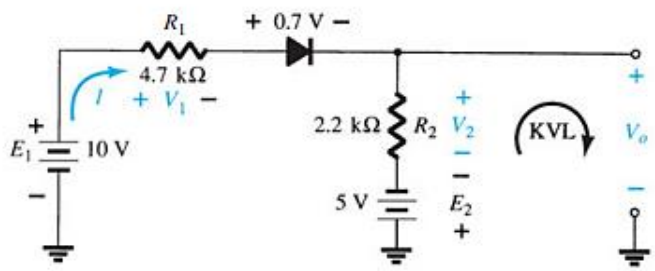

FIG. 2.27
Determining the unknown quantities for the network of Fig. 2.25. KVL, Kirchhoff voltage loop.

result from the appearance of another source. As indicated in the introduction to this section, this is probably the path and notation that one will take when a level of confidence has been established in the analysis of diode configurations. In time the entire analysis will be performed simply by referring to the original network. Recall that a reverse-biased diode can simply be indicated by a line through the device.

The resulting current through the circuit is

$$I = \frac{E_1 + E_2 - V_D}{R_1 + R_2} = \frac{10\text{ V} + 5\text{ V} - 0.7\text{ V}}{4.7\text{ k}\Omega + 2.2\text{ k}\Omega} = \frac{14.3\text{ V}}{6.9\text{ k}\Omega}$$
$$\cong \mathbf{2.07\ mA}$$

and the voltages are

$$V_1 = IR_1 = (2.07\text{ mA})(4.7\text{ k}\Omega) = \mathbf{9.73\ V}$$
$$V_2 = IR_2 = (2.07\text{ mA})(2.2\text{ k}\Omega) = \mathbf{4.55\ V}$$

Applying Kirchhoff's voltage law to the output section in the clockwise direction results in

$$-E_2 + V_2 - V_o = 0$$

and

$$V_o = V_2 - E_2 = 4.55\text{ V} - 5\text{ V} = \mathbf{-0.45\ V}$$

The minus sign indicates that V_o has a polarity opposite to that appearing in Fig. 2.25.

EXAMPLE 2.10 Determine V_o, I_1, I_{D_1}, and I_{D_2} for the parallel diode configuration of Fig. 2.28.

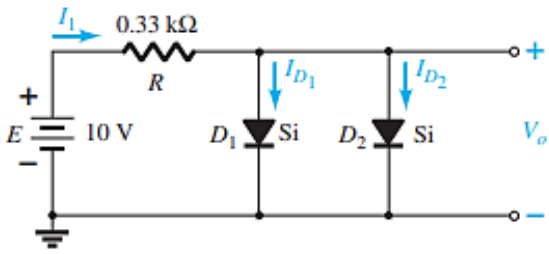

FIG. 2.28
Network for Example 2.10.

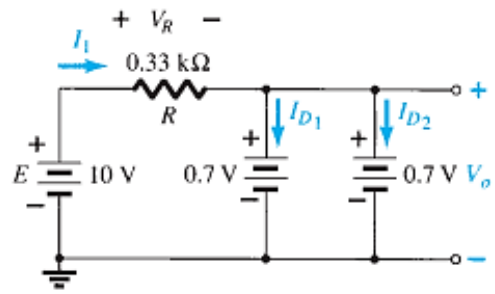

FIG. 2.29
Determining the unknown quantities for the network of Example 2.10.

Solution: For the applied voltage the "pressure" of the source acts to establish a current through each diode in the same direction as shown in Fig. 2.29. Since the resulting current direction matches that of the arrow in each diode symbol and the applied voltage is greater than 0.7 V, both diodes are in the "on" state. The voltage across parallel elements is always the same and

$$V_o = \mathbf{0.7\ V}$$

The current is

$$I_1 = \frac{V_R}{R} = \frac{E - V_D}{R} = \frac{10\ \text{V} - 0.7\ \text{V}}{0.33\ \text{k}\Omega} = \mathbf{28.18\ mA}$$

Assuming diodes of similar characteristics, we have

$$I_{D_1} = I_{D_2} = \frac{I_1}{2} = \frac{28.18\ \text{mA}}{2} = \mathbf{14.09\ mA}$$

This example demonstrates one reason for placing diodes in parallel. If the current rating of the diodes of Fig. 2.28 is only 20 mA, a current of 28.18 mA would damage the device if it appeared alone in Fig. 2.28. By placing two in parallel, we limit the current to a safe value of 14.09 mA with the same terminal voltage.

EXAMPLE 2.13 Determine the currents I_1, I_2, and I_{D_2} for the network of Fig. 2.37.

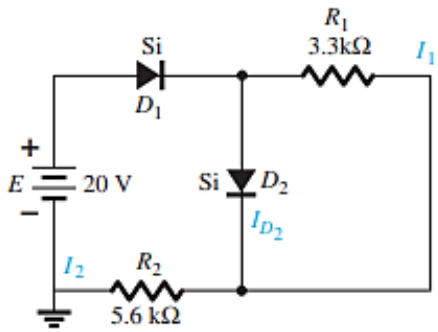

FIG. 2.37
Network for Example 2.13.

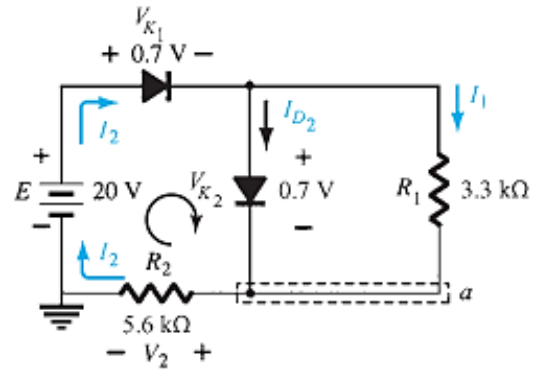

FIG. 2.38
Determining the unknown quantities for Example 2.13.

Solution: The applied voltage (pressure) is such as to turn both diodes on, as indicated by the resulting current directions in the network of Fig. 2.38. Note the use of the abbreviated notation for "on" diodes and that the solution is obtained through an application of techniques applied to dc series–parallel networks. We have

$$I_1 = \frac{V_{K_2}}{R_1} = \frac{0.7\text{ V}}{3.3\text{ k}\Omega} = \mathbf{0.212\text{ mA}}$$

Applying Kirchhoff's voltage law around the indicated loop in the clockwise direction yields

$$-V_2 + E - V_{K_1} - V_{K_2} = 0$$

and
$$V_2 = E - V_{K_1} - V_{K_2} = 20\text{ V} - 0.7\text{ V} - 0.7\text{ V} = \mathbf{18.6\text{ V}}$$

with
$$I_2 = \frac{V_2}{R_2} = \frac{18.6\text{ V}}{5.6\text{ k}\Omega} = \mathbf{3.32\text{ mA}}$$

At the bottom node a,

$$I_{D_2} + I_1 = I_2$$

and
$$I_{D_2} = I_2 - I_1 = 3.32\text{ mA} - 0.212\text{ mA} \cong \mathbf{3.11\text{ mA}}$$